US00D614559S

(12) **United States Design Patent**
Alber et al.

(10) **Patent No.: US D614,559 S**
(45) **Date of Patent: ** Apr. 27, 2010**

(54) **ROTARY-WING AIRCRAFT WITH A COMMON DYNAMIC SYSTEM/BACKBONE STRUCTURE**

(75) Inventors: **Mark R. Alber**, Milford, CT (US); **Benjamin Reed Hein**, Milford, CT (US); **Alfred Russell Smiley**, Marlborough, CT (US); **Timothy F. Lauder**, Oxford, CT (US); **William J. Eadie**, Cheshire, CT (US)

(73) Assignee: **Sikorsky Aircraft Corporation**, Stratford, CT (US)

(**) Term: **14 Years**

(21) Appl. No.: **29/284,739**

(22) Filed: **Sep. 14, 2007**

(51) **LOC (9) Cl.** **09-12**
(52) **U.S. Cl.** **D12/326**
(58) **Field of Classification Search** ..... D12/319, D12/343, 326, 327; 244/35 R, 45 R, 119, 244/130
See application file for complete search history.

(56) **References Cited**

U.S. PATENT DOCUMENTS

D336,888 S * 6/1993 Alber et al. D12/327
D592,583 S * 5/2009 Brody et al. D12/326

* cited by examiner

Primary Examiner—Lisa P Lichtenstein
(74) *Attorney, Agent, or Firm*—Carlson, Gaskey & Olds PC

(57) **CLAIM**

The ornamental design for a rotary-wing aircraft with a common dynamic system/backbone structure, as shown and described.

DESCRIPTION

FIG. **1** is a side view of a rotary-wing aircraft;

FIG. **2** is a front view of a rotary-wing aircraft of FIG. **1**;

FIG. **3** is a top view of a rotary-wing aircraft of FIG. **1**; and,

FIG. **4** is a front left perspective view of a rotary-wing aircraft of FIG. **1**.

1 Claim, 3 Drawing Sheets

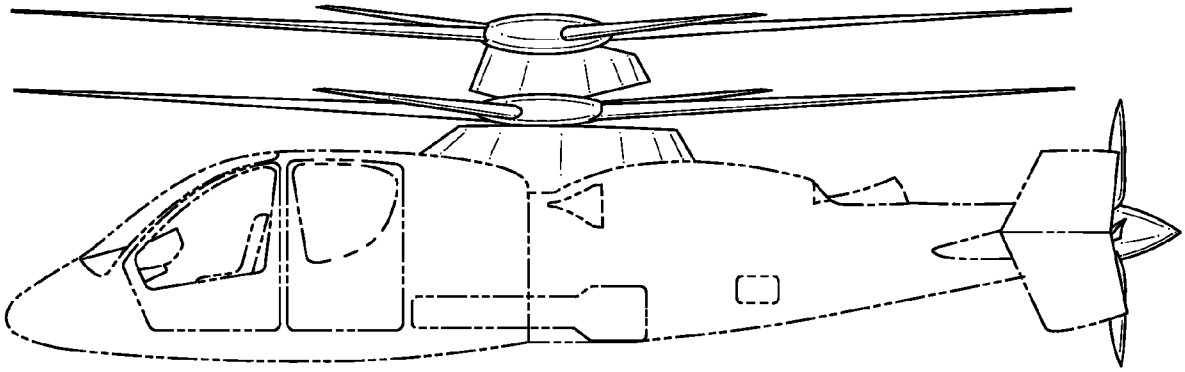

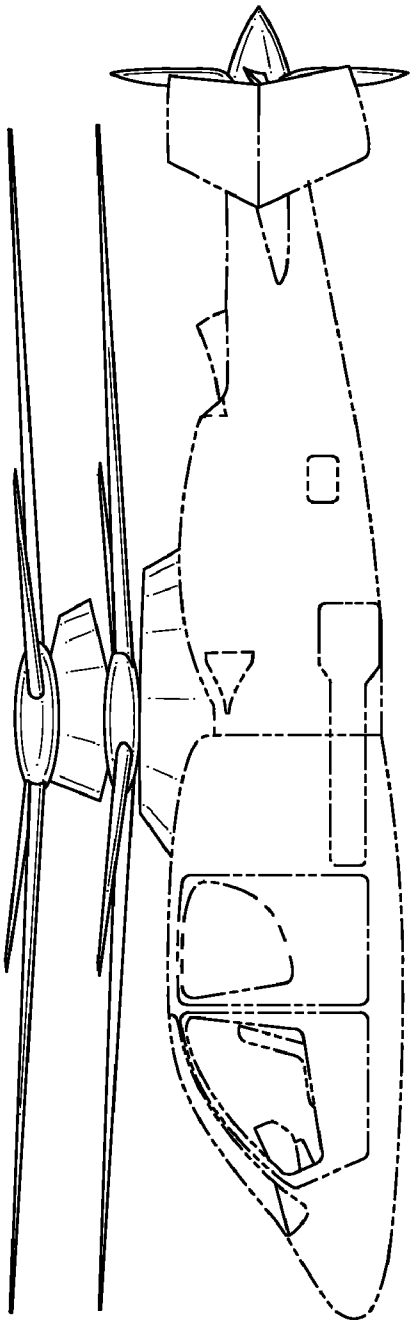

FIG.1

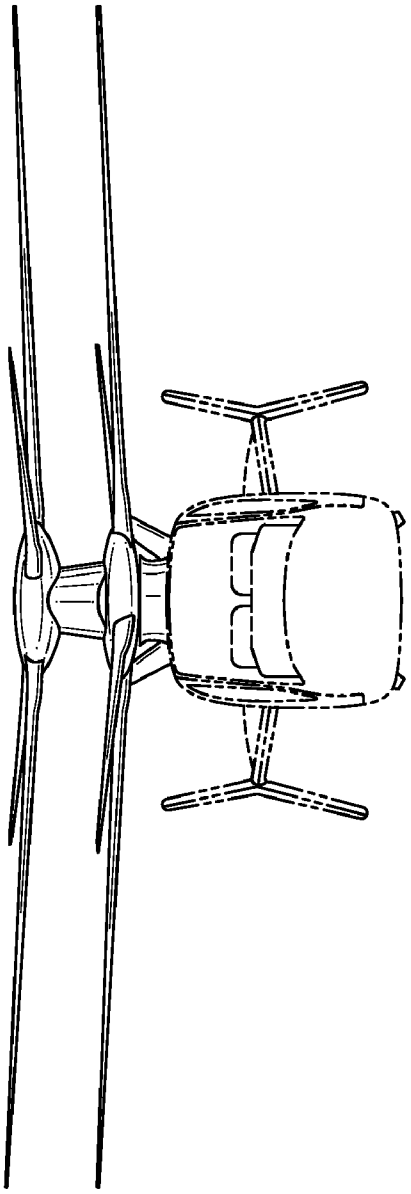

FIG.2

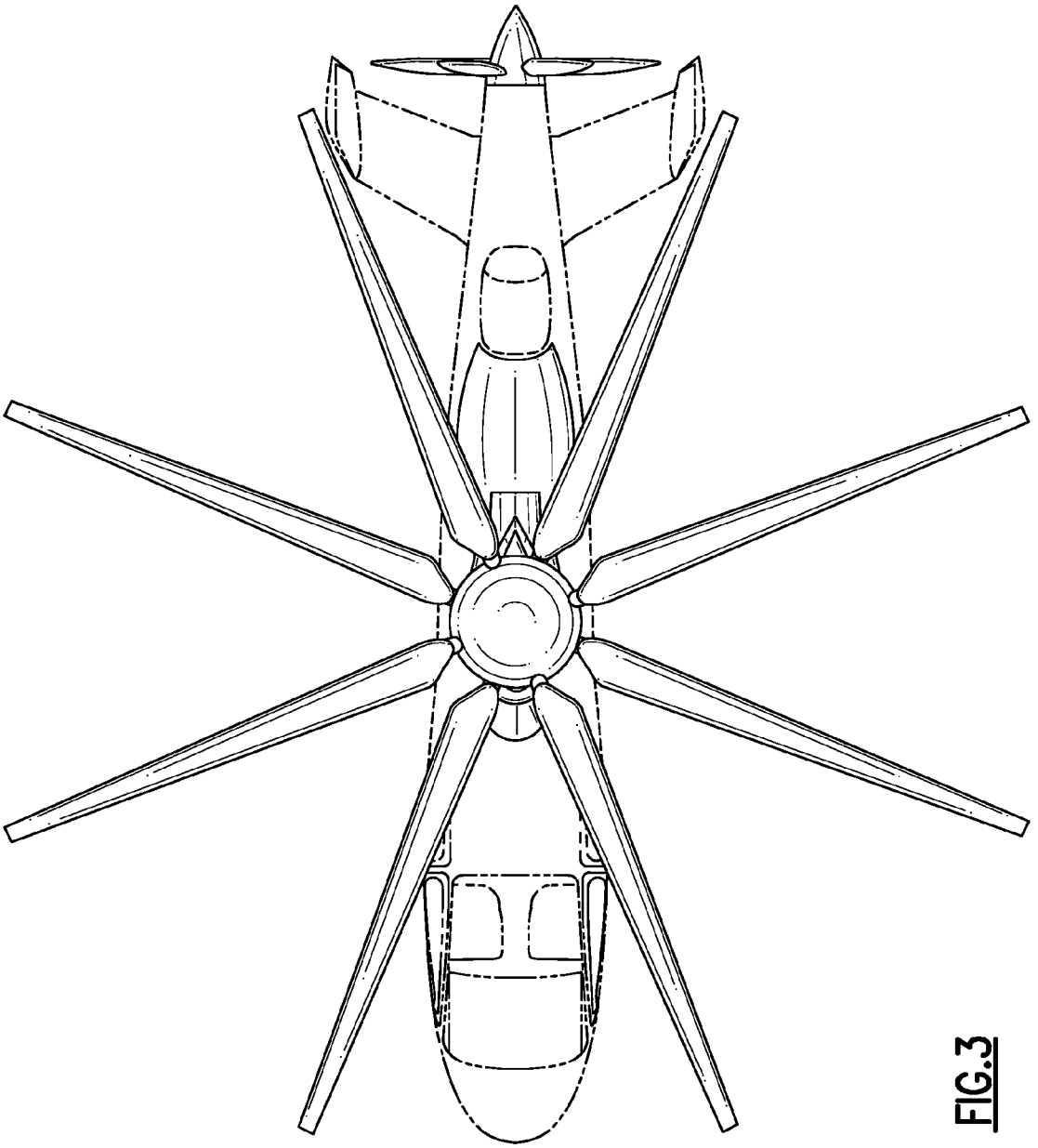

FIG.3

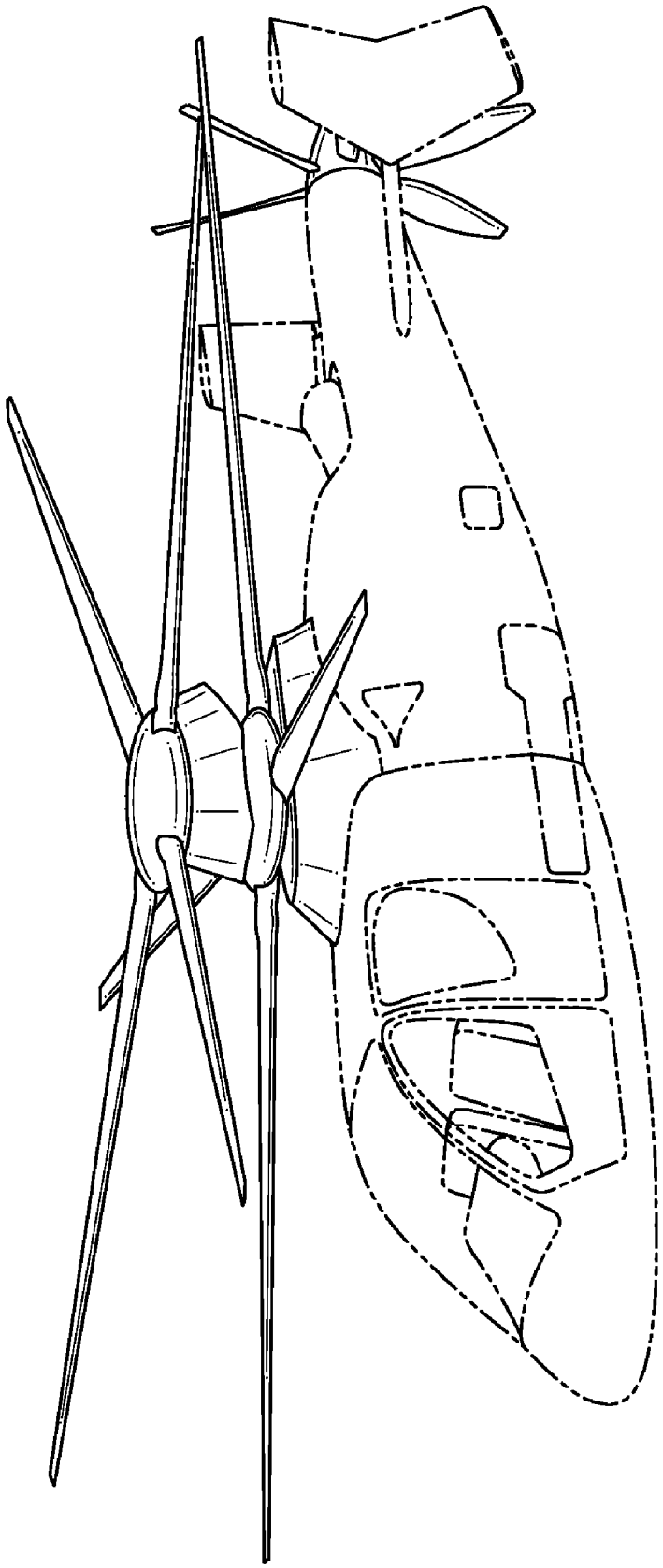

FIG.4